User Manual

Energy Storage System (ESS)

To prevent damage to the product caused by improper use, please carefully read this manual before operation.

Copyright © FOXESS CO., Ltd. All rights reserved.

No part of this document may be reproduced, copied, or distributed in any form or by any means without prior written authorization from the company.

Trademarks

and other Fox ESS trademarks are the property of FOXESS CO., Ltd.

All other trademarks or registered trademarks mentioned in this document belong to their respective owners.

Software License

Commercial use of any part or all of the firmware or software developed by the company is strictly prohibited.

Reverse engineering, decompilation, or any other actions that destroy the original design of the company's software are prohibited.

This document is intended as a usage guide only. All statements, information, and recommendations herein do not constitute any warranty, express or implied.

Due to product version updates or other reasons, the content of this document may be updated periodically. Please download the latest version from the official website if needed.

FOXESS CO., Ltd

Add:

No.939, Jinhai Third Road, New Airport Industry Area, Longwan District, Wenzhou, Zhejiang, China

Tel: 0510- 68092998

Postcode: 325024

WWW.FOX-ESS.COM

Version V1.1.1

Date 2026-07

Contents

1 Manual Description 1

1.1 Scope of application 1

1.2 Target Group 1

1.3 Symbols Used 1

1.4 Explanation of symbols 2

2 Safety Precautions 3

2.1 Fair Use 3

2.2 Maintenance and cleaning 4

2.3 Disposal Safety 4

3 Product Introduction 5

3.1 Basic Features 5

3.2 Product Principle 5

3.3 Operating mode 6

3.4 EMS control mode 7

3.5 Energy management mode 7

3.6 Product size(unit:mm) 9

3.7 System technical parameters 10

3.8 Component Description 11

3.9 Panel Introduction 12

3.10 Battery PACK 12

3.11 Fire protection system 14

3.12 Liquid-cooled units 15

3.13 Power Conversion System 16

4 Unpacking and handling 20

4.1 Check after unpacking 20

4.2 Unpacking precautions 20

4.3 Storage and Recharge Instructions 20

4.4 Transportation 22

4.5 Transportation before unpacking 23

4.6 Unpacking and Inspection 25

4.7 Transportation after unpacking 26

5 Engineering Installation 28

5.1 Packing List 28

5.2 Installation Tips 28

5.3 Preparation before installation 29

5.4 Ground connection 34

6 Electrical installation 35

6.1 Wiring preparation 35

6.2 ESS power on 39

6.3 ESS Shutdown 40

7 Cabinet refinishing 42

7.1 Paint Refinishing Instructions 42

7.2 Paint Repairing Steps 43

8 Appendix 45

8.1 Quality Guarantee 45

8.2 Contact Us 46

COPYRIGHT © FOXESS CO., LTD.

1 Manual Description

1.1 Scope of application

This manual applies to the following types of industrial and commercial energy storage products for fixing, installation, commissioning, maintenance and troubleshooting methods.

TM215kWh-100kW-2hF、GM215kWh-100kW-2hF

Please keep this manual where it will be accessible at all times.

1.2 Target Group

This manual is for use only by electricians with electrical operation certificates. The operations described in the manual must be performed by trained and experienced electricians in accordance with basic electrical safety protection requirements.

Note: Maintenance personnel must hold a qualified electrician certificate issued by the Safety Supervision Bureau or a Fox ESS after-sales maintenance engineer to carry out maintenance work.

1.3 Symbols Used

The following are safety instructions and general information symbols that may be used in this manual.

⚠ Danger!

"Danger" indicates a highly hazardous situation which, if not avoided, will result in death or serious injury.

⚠ Warning!

"Warning" indicates a hazardous situation which, if not avoided, could result in minor or moderate injury.

⚠ Caution!

"Caution" indicates a less hazardous situation which, if not avoided, may result in minor or moderate injury.

Notice!

"Notice" provides important tips and instructions which, if not avoided, could result in property damage.

COPYRIGHT © FOXESS CO., LTD.

1.4 Explanation of symbols

This section explains the symbols displayed on the ESS and its labels.

Symbols	Explanation
	Danger from high temperatures. ESS will rise during operation and contact should be avoided.
	Danger due to high voltage. Due to the high voltage present in the ESS , there is a high potential for life-threatening hazards!
	Hazards, Warnings and Precautions Important safety information regarding personal safety. Failure to follow the safety information in this manual may result in injury or death!
	Maintenance and replacement After powering off equipment other than battery packs, you must wait 5 minutes to ensure that the equipment is out of power before operating the equipment.
	Please read the manual before performing any operation on ESS.
	Product should not be disposed of as household waste.
	PE protective ground terminal.
	Caution risk of hearing damage, wear hearing protection

COPYRIGHT © FOXESS CO., LTD.

2 Safety Precautions

2.1 Fair Use

- ESS is designed and tested in accordance with international safety requirements. However, certain safety measures must be taken when installing and operating ESS. The installer must read and follow all instructions, precautions and warnings in this installation manual.
- All operations, including transportation, installation, startup and maintenance, must be performed by qualified and trained personnel.
- The electrical installation and maintenance of this product should be performed by a certified electrician and should comply with local standards and relevant safety regulations for electrical systems.
- Before installation, check the machine to ensure that it has no damage caused by transportation or handling that may affect the insulation performance or safety distance. Carefully select the installation location and comply with the specified cooling requirements. Unauthorized removal of necessary protective measures, improper use, and improper installation operations may cause serious safety hazards, impact hazards, or equipment damage.
- Before connecting this product to the distribution grid, please contact your local distribution grid company for approval. This connection must be made by qualified technicians.
- When operating or maintaining ESS, you must wear a safety helmet, insulating gloves, insulating shoes, and goggles. It is strictly prohibited to wear watches and other metal accessories.
- All repairs should be performed using only approved spare parts, which must be installed according to their purpose and installed by an authorized contractor or authorized service representative.
- Warning: It is strictly prohibited to touch the ESS high voltage positive and negative poles with both hands at the same time at any time.
- Warning: Be sure to disconnect the corresponding high-voltage and low-voltage switches before performing maintenance operations on ESS.
- Warning: When cleaning ESS, it is prohibited to directly clean the high and low voltage connectors with water.
- Warning: It is strictly prohibited to squeeze, puncture, or burn the energy storage battery to damage the system.
- Warning: If you have any questions, please contact the system supplier. Unauthorized operation is prohibited.
- Use extreme caution when this product is disconnected from the public power grid as some parts may maintain a voltage that could create a shock hazard. Before touching any part of this product, make sure the equipment and its surfaces are at contact-safe temperatures and voltages before proceeding.
- This product should be used in an environment that meets the design specifications, otherwise it may cause malfunctions. Functional abnormalities or component damage caused by failure to comply with relevant regulations are not covered by the product quality guarantee.
- Fox will not bear any legal responsibility for personal safety accidents, property losses, etc. caused by failure to comply with the contents of this manual or illegal operation of products.

COPYRIGHT © FOXESS CO., LTD.

2.2 Maintenance and cleaning

- If installed outdoors, keep the sides of the ESS clear of leaves and other debris to maintain optimal airflow.
- ESS and installation site entrances and exits do not require pre-scheduled preventive maintenance. The only maintenance required by the owner is to keep ESS unobstructed and free of debris, especially near the air inlets and outlets.
- To clean ESS, use a soft, lint-free cloth, if necessary, dampen the rag with mild soap and water only.
- Do not use cleaning solvents to clean the ESS, or expose it to flammable and irritating chemical gases.

2.3 Disposal Safety

The Company does not recycle batteries. Please scrap the product in accordance with relevant local regulations and standards to avoid property losses or casualties.

COPYRIGHT © FOXESS CO., LTD.

3 Product Introduction

3.1 Basic Features

The ESS liquid-cooled energy storage system optimizes and integrates high-performance three-level PCS, batteries, BMS, EMS systems, thermal management systems, power distribution and fire protection systems, and adopts a single string design to achieve zero loss tolerance in parallel connection .

The ESS liquid-cooled energy storage system integrates harmonic control and three-phase imbalance control, and also has the functions of peak shaving and valley filling, peak load regulation and frequency modulation. Multiple sets of cabinets can be directly connected in parallel to achieve capacity expansion and plug-and-play, forming an integrated and conveniently installed smart energy product.

3.2 Product Principle

Main circuit diagram:

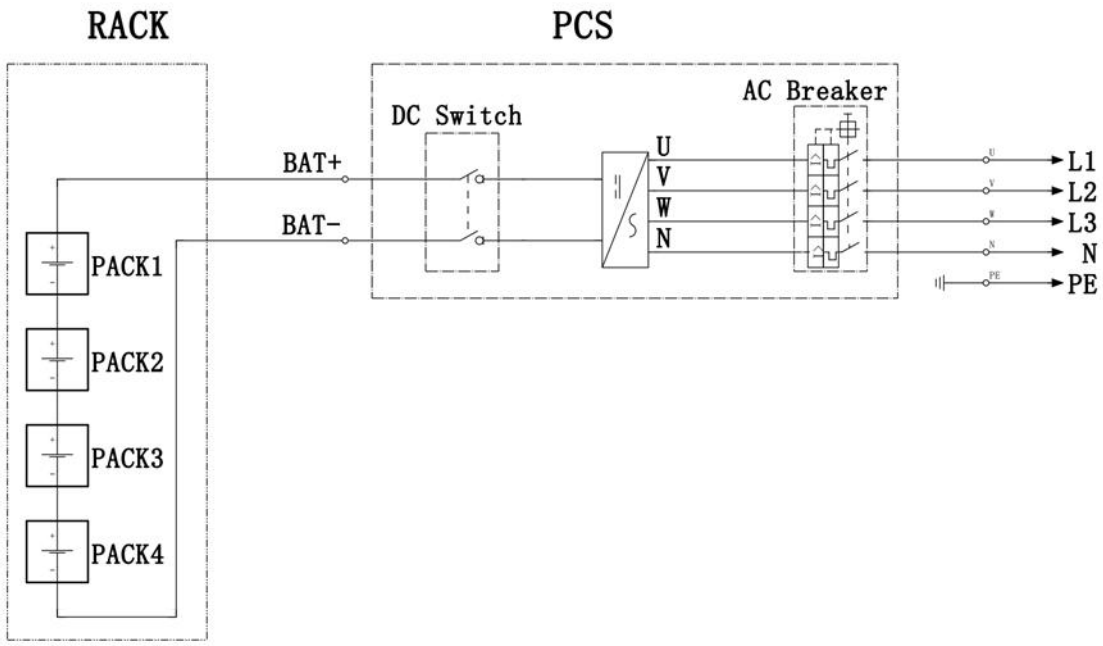

3.3 Operating mode

The ESS liquid cooling system supports both grid-connected and off-grid operation modes.

- Grid-connected operation mode

The ESS liquid cooling system is connected to the power grid on the AC side and internally connected to lithium batteries on the DC side. It can be applied to power expansion, photovoltaic storage and charging, peak shaving and valley filling, and other application scenarios. When connected to the grid, the energy storage converter can automatically track the grid frequency, and combine with the monitoring system to achieve smooth power output, peak shaving and valley filling, load balancing, transient active output emergency response, transient voltage emergency support, and improved power quality.

- Off-grid operation mode

The ESS DC side is connected to a lithium battery, and the system can output a three-phase AC voltage with a constant amplitude and frequency to achieve continuous power supply to the AC side load. When the power grid fails or is in an independent system, the device can continue to supply power to various loads.

NOTICE
When operating off the grid, the requirements for load carrying are as follows: 1. The instantaneous peak current (basic current + inrush current) during load switching shall not exceed 1.1 times the rated current of the PCS. 2. The sum of the rated capacities of all loads shall not exceed two-thirds of the rated capacity of the PCS. For purely inductive loads, it shall be one-half of the rated capacity. 3. Load-carrying capacity for motor-type loads: For variable-frequency or soft-start motor-type loads, it shall not exceed two-thirds of the rated power of the PCS. If the PCS is already under load, the capacity for switching motor-type loads will be reduced proportionally. 4. Isolation transformer: The isolation transformer supporting the PCS must be started simultaneously with the PCS. It is not allowed to start the PCS first and then put the isolation transformer into operation.

COPYRIGHT © FOXESS CO., LTD.

3.4 EMS control mode

The control modes include manual, automatic, and proxy.

1) Manual mode: Users can manually switch sites, start and stop each energy storage subsystem under the user account, and start and stop the energy storage control system.

2) Automatic mode: Users can independently configure the control strategy for each energy storage subsystem under the account, and can add, delete, view, and edit policy templates. Policy management and policy template formulation can be carried out, and the template name, policy type, start time, end time, energy storage control type, energy storage plan power, etc. can be configured as needed.

3) Agent mode: Support third-party management systems to operate and control each energy storage subsystem of the site through this system. In proxy mode, the system will display the third-party call log to facilitate subsequent tracking and management.

3.5 Energy management mode

3.5.1 Constant power charge and discharge

Through the power set by the local controller, combined with the set policy template, instructions are issued to the energy storage converter inside the energy storage integrated system to charge or discharge the battery.

NOTICE
Battery System Forced Charging： When the minimum cell voltage of the battery system reaches ≤ 2.9V, forced charging will be triggered. The charging will stop when the minimum single-cell voltage is ≥ 3.2V and the State of Charge (SOC) is ≥ 3%. The charging power is adjustable within the range of 5-20kW, and the default value is 20kW.

3.5.2 Peak shaving and valley filling

According to the user's electricity consumption pattern, peak and valley values are set to reduce load peaks and fill load valleys, so that power generation and electricity consumption tend to be balanced. In this mode, the energy storage system maximizes its output.

1) When the grid power is greater than the peak value (or at the peak electricity price), the energy storage integrated system starts to discharge.

2) When the grid power is less than the valley value (or is in the valley electricity price), the energy storage integrated system starts charging.

3.5.3 Demand control

When the photovoltaic system (if any) maximizes its output, if the load power still exceeds

COPYRIGHT © FOXESS CO., LTD.

the set demand power, the local controller controls the output of the energy storage system to stabilize the power that exceeds the demand and increase the economy of the system.

3.5.4 Anti-backflow control

Prevent energy storage discharge from feeding into the grid.

3.5.5 System Black Start

Under special circumstances when Grid power are out of order, the battery can be activated through the "Black Start" function. This means that our energy storage inverter and battery can continue to operate. The start up function for Black Start are as follows:

The black start function of the G-MAX high-voltage box enables automatic switching to the off-grid mode (without delay) in the event of a sudden power outage on the AC side of the grid during normal operation, ensuring that the G-MAX can discharge normally in the off-grid state.

Without AC power supply, if you want to start the system, you can press the B-Start button on the high-voltage box for more than 3 seconds to activate the high-voltage box and the EMS.The Status LED remains solid green, indicating successful activation of Black Start mode.

Note：

Ensure correct battery-inverter connection prior to Black Start. No wiring modifications during Black Start.

In off-grid mode, G-MAX can only discharge to the load but cannot charge itself. When the battery's SOC is 0%, the B-Start function is prohibited from being used to power on the high-voltage box and EMS; otherwise, there is a risk of under-voltage for the G-MAX battery.

COPYRIGHT © FOXESS CO., LTD.

3.6 Product size(unit:mm)

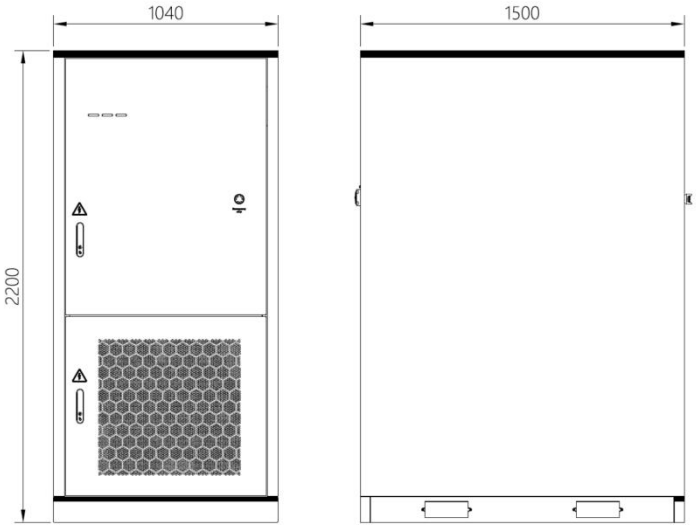

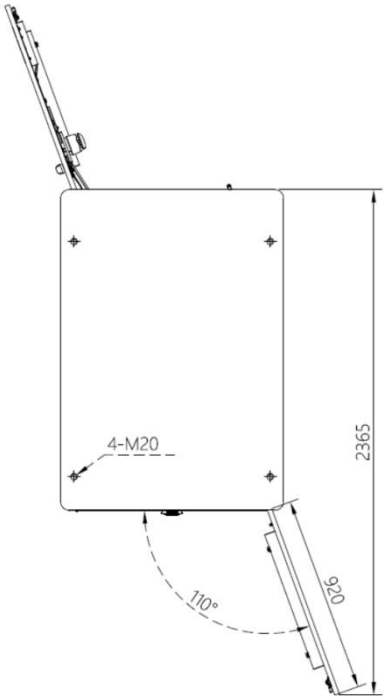

Lifting holes, door opening radius and maximum door opening angle

3.7 System technical parameters

Items	Specification
DC parameter	
Cell technology	LiFePO4 3.2V/280Ah
Battery pack energy	53.76kWh
System battery string configuration	1P240S
Battery system energy	≥215kWh
Battery rated voltage	672~876Vdc
Maximum charge/discharge current	140Ad.c.
Rated charge/discharge rate	≤0.5C
Depth of discharge	0-100%
DC protection	FUSE
Battery pack degree of protection	IP67
Cooling type	Liquid cooling
AC parameter	
Rated AC input/output power	100kW
Max. continuous AC input/output power	110kW 100kW [1]
Max. apparent power	110kVA 100kVA [1]
Rated AC current	145Aa.c.
Max. AC current	167Aa.c.
THDi	<3%
Nominal voltage	380/400 V a.c.,3L/N/PE
Power factor	>0.99
Adjustable power factor range	0.8 (lagging) ~ 0.8 (leading)
Nominal frequency	50/60 Hz
Round trip efficiency	>89%
Communication interfaces	Ethernet
Protection class	I
Ingress protection	IP54
Short-circuit current	340A(AC)/196A(DC)
Cooling type	Intelligent air cooling
Altitude	≤3000m
Operation temperature	-25~55°C (>45°C derating operation)
Relative humidity	0~95% (non-condensing)
Noise	<75db@1m
Weight	2.5T
Dimension (W*H*D)	1040mm × 2200mm× 1500mm
Fire safety equipment	Aerosol Fire Extinguisher Device
Certificate	IEC 62619/IEC 60730-1 appended H/IEC 62477-1/IEC 61000-6-2,4/UN 38.3

[1] Only for Spanish market.

COPYRIGHT © FOXESS CO., LTD.

3.8 Component Description

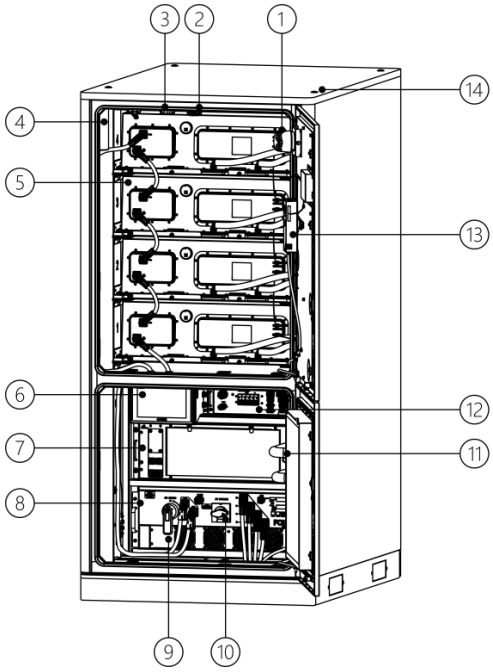

Front

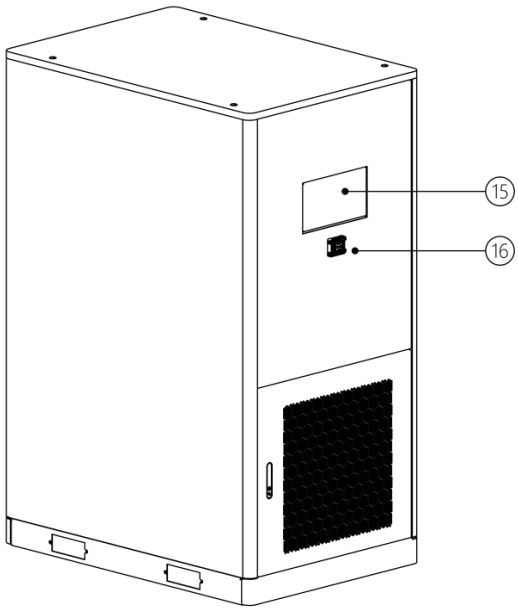

Back

Serial number	Name
①	Audible and visual alarms
②	Temperature detectors
③	Smoke detectors
④	Fire extinguishers
⑤	Battery PACK
⑥	Energy Management System (EMS)
⑦	Liquid-cooled units
⑧	PCS
⑨	DC Switch
⑩	AC circuit breaker
⑪	Liquid cooling piping
⑫	Integrated distribution box
⑬	Dehumidifier
⑭	Energy storage cabinet lifting holes
⑮	Pressure Release Valve
⑯	Explosion-proof Waterproof Vent Valve

COPYRIGHT © FOXESS CO., LTD.

3.9 Panel Introduction

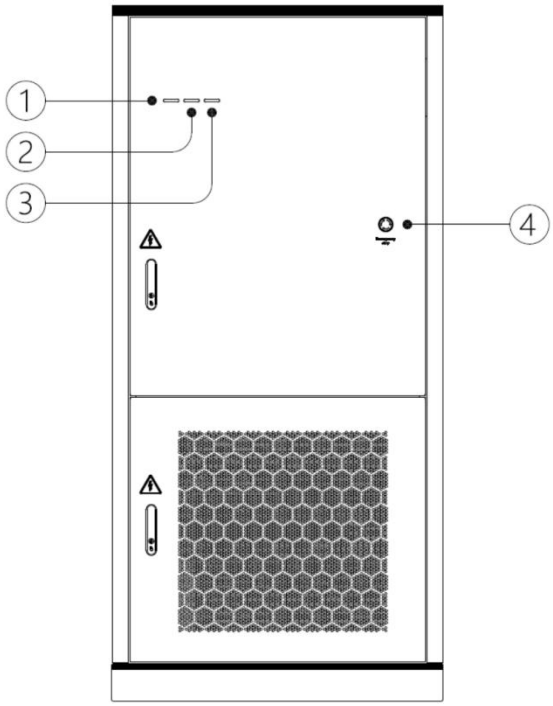

No.	Function
1	“POWER” indicator: the cabinet switch is closed, the system is energized, the indicator light is blue.
2	RUN indicator: When the system is charging or discharging, the indicator is blue.
3	"RUN&FAULT" indicator: When the system is running normally (charging or discharging), the blue light is on. When the system fails, the red light is on.
4	Emergency stop button: When the equipment is in abnormal state, press the button to stop the system operation.

The above pictures are for reference only and are subject to the real thing.

3.10 Battery PACK

Items	Specification
Model type	GM-PACK-54
Cell Type	LFP 3.2/280V/Ah
Battery pack energy	53.76kWh
Grouping method	1P60S
Rated voltage	192
Maximum charge voltage	219V
Discharge cut-off voltage	168V
Rated current	140A
Max. charge/discharge current	140A
Number of temperature sensors	32
Cooling method	liquid cooling
IP Protection Rating	IP67
Recommended (rated) charge method	Charging the battery with 140A constant current until 3.5V, then constant voltage until charging current reduces to 0.05C
Recommended (rated) discharge method	Discharging the battery with 140A constant current to discharge cut-off voltage 168V
Charge temperature range	0°C~55°C
Discharge temperature range	-25°C~55°C
Storage temperature range	0°C~35°C
Nominal weight	390kg
Nominal dimension	808 mm x 1303 mm x 253 mm

System lock (or system lock function)

The battery system shall have a non-resettable function to stop operation when one or more cells in the battery system deviates from the operating region during operation. This feature shall not be user resettable or allow for automatic reset.

The function of the battery system may be returned after checking that the status of the battery system complies with the battery system manufacturer manual, i.e. the battery system maintenance manual shall clearly set out this procedure.

Depending on the application, a battery system may allow a final discharge, for example to provide emergency functions. In this case. cell limits (e.g. lower limit discharge voltage or uppel temperature limit) may deviate once within the range where the cell does not cause dangerous reactions. Therefore, the cell manufacturer shall provide the second set of limits in which the cell in the battery system may accept one discharge without dangerous reactions. The cell should not be further recharged after this last discharge.

COPYRIGHT © FOXESS CO., LTD.

3.11 Fire protection system

Brief description of the firefighting programme:

The energy storage cabinet is generally divided into two separate protection zones, which can really extinguish the fire quickly and keep it from re-igniting, ensuring that the energy storage station is safe to use.

The two separate protection zones are:

- PACK level of protection: The cell is the source of ignition and the battery box is the protection unit.
- Cluster level protection: The battery box is the source of ignition and the cluster is the protection unit.

How the system works:

When a fire occurs when the core is out of thermal control, PACK level protection can quickly detect the fire and activate the fire extinguishing device at the first time to extinguish the fire; or cluster level protection quickly intervenes, the smoke detector outputs an electrical signal to activate the audible and visual alarm to notify the personnel to make a deal, and the smoke and temperature detector outputs an electrical signal to activate the fire extinguishing device to extinguish the fire, and the synchronous output of the feedback signal to the EMS, to notify the personnel to deal with the situation in a timely manner.

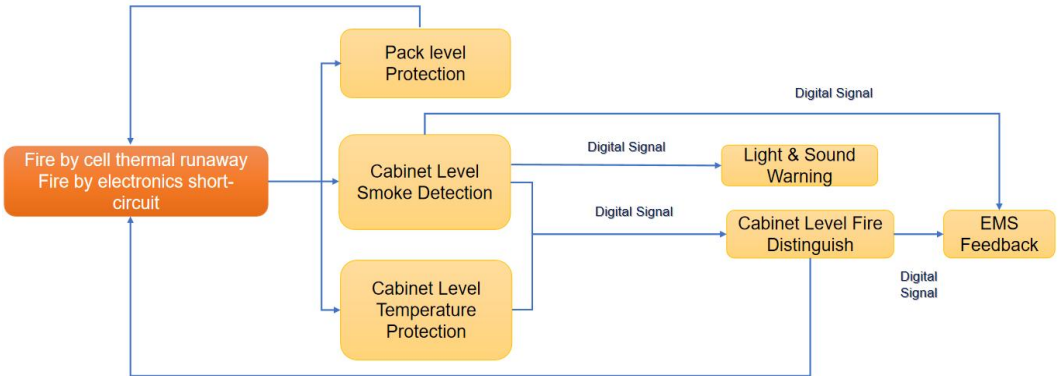

System fire control logic

3.12 Liquid-cooled units

Liquid-cooled unit mainly consists of compressor, condenser, throttling element, evaporator, water pump, expansion tank, PTC liquid heater and necessary control components.

The liquid cooling unit is used to regulate the temperature of the battery pack in the ESS to ensure that it always works within the appropriate temperature range to maintain the optimal working condition of the system. It has the following functions:

- Precise measurement and monitoring of coolant temperature.
- Effective heat dissipation when the battery pack temperature is high to prevent thermal runaway accidents.
- Preheating is carried out when the battery temperature is low to raise the battery temperature and ensure charging and discharging performance and safety at low temperature. Air-cooled chiller is through the coolant convection heat transfer, the heat generated by the battery away, so as to reduce the battery temperature. The liquid medium has a high heat transfer coefficient, a large specific heat capacity and a fast cooling speed, which is effective in reducing the temperature of the battery pack and improving the consistency of the temperature field of the battery pack.

Cooling mode：

Both the refrigerant circulation circuit and the coolant circulation circuit are open.

- On the refrigerant side, the compressor compresses the low-temperature, low-pressure gaseous refrigerant into a high-temperature, high-pressure gaseous refrigerant, which enters the condenser. By the condensing fan forced convection cooling, phase change and release heat into medium temperature and high pressure liquid refrigerant, into the throttle valve. In the throttle valve isenthalpic throttling and pressure reduction occurs to become a low-temperature, low-pressure liquid mist refrigerant into the evaporator. In the evaporator, the liquid mist refrigerant evaporates and absorbs the heat of the coolant to become a low-temperature, low-pressure gaseous refrigerant, which then enters the compressor to start the next cycle.
- On the coolant side, the liquid pump does the work so that the high temperature coolant in the battery pack cooling plate enters the evaporator and exchanges heat with the refrigerant to become the low temperature coolant, which flows back into the battery pack cooling plate to cool down the battery pack.

COPYRIGHT © FOXESS CO., LTD.

Heating mode:

The refrigerant circulation circuit, compressor and condensing fan are off, and the coolant circulation circuit is on. On the coolant side, the water pump is started and the heater is turned on, and the coolant flows through the heater to heat up and then flows back into the battery pack cooling plate to achieve heating and insulation of the battery pack.

Liquid cooling machine main technical parameters:

Items	Specification
Rated Working Voltage	220~240V 50/60Hz
Maximum operating current	12.5A
Cooling capacity	3.0kW
Calorific value	2.0kW
Operating environment temperature range	-30°C~+55°C
Coolant type	50% ethylene glycol solution
Rated circulating water flow	30L/min
Rated external circulation head	60kPa
Max. power consumption	2.34kW
Maximum pressure of the water circuit system	180KPa
Unit size (W*H*D)	700mm×245mm×900mm
IP Protection Rating	IPX5
Air outlet method	Exhaust

3.13 Power Conversion System

An energy storage converter is a bidirectional converter that controls the charging and discharging of energy storage batteries. As a key component of the smart grid, it regulates power resources and ensures the normal operation of the grid. On the one hand, the converter can convert the direct current (DC) from the energy storage batteries into alternating current (AC) to supply power to loads or feed into the grid; on the other hand, it can rectify the alternating current from the grid into direct current to charge the energy storage batteries. Rated power: 100 kW.

System advantages:

- Advanced DSP control technology.
- Utilises the latest high-efficiency power supply topology.
- Advanced anti-islanding solution.
- Maximum efficiency of up to 98.1%, with total harmonic distortion <3%.

COPYRIGHT © FOXESS CO., LTD.

- Safe and reliable: transformerless design, with hardware and software overvoltage and overcurrent protection.
- LED status indicators.
- Supports remote monitoring via PC or mobile app.

PCS dimensions:

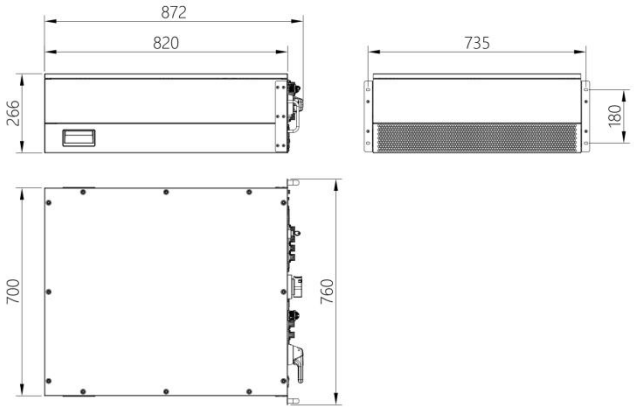

Panel description:

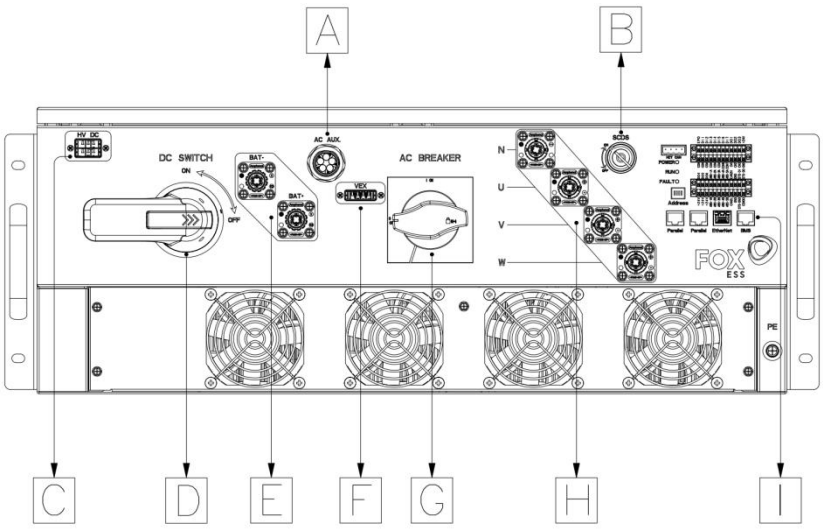

No.	Name	Description
A	AC_AUX	AC power supply for HV box
B	SCDS	Local switch
C	HVDC	DC power supply for HV box
D	DC SWITCH	DC switch
E	BAT+, BAT-	DC connector
F	VEX	External voltage sampling
G	AC BREAKER	AC switch
H	U, V, W, N	AC connector
I	Communication panel	Includes BMS, parallel, Ethernet, etc. See 6.3

Note: Only authorised personnel are permitted to set up connections.

COPYRIGHT © FOXESS CO., LTD.

DC input, AC output

Item	Sub-item	Specification
DC Parameters	Rated DC power	100kW
	Max. DC voltage	900V
	DC voltage operating range	660V ~ 900V
	Max. DC current	167A
	No. of DC inputs	1
	Voltage regulation accuracy	≤±2%
	Current regulation accuracy	≤±3%
	Current ripple (constant current charging)	≤5%
	Voltage ripple (constant voltage charging)	≤2%
AC Parameters (Grid-tied)	Rated AC power	100kVA @ 50°C
	Max. AC power	110kVA @ 45°C
	AC voltage operating range	380/400 (-15%~15%) Vac
	AC voltage frequency	50/60 (-2.5~2.5) Hz
	Rated AC current	152A @ 50°C
	Max. AC current	167A @ 45°C
	AC connection type	3-phase 4-wire / 3-phase 3-wire
	Isolation type	Non-isolated grid-tied
	Power factor	0.99 / -1~1
	Total current harmonic distortion	<3%
	Charge/discharge switching time	<100ms
AC Parameters (Off-grid)	Rated output voltage	380/400 (-10%~10% adjustable) Vac
	Output voltage distortion	≤1% (linear load)
	Rated output frequency	50/60 (-2.5~2.5 adjustable) Hz
	Rated output power	100kW @ 50°C
	Overload capacity	1.1x continuous @45°C; 1.2x for 1min; 1.3x for 1s
	Output voltage transient (dynamic load change)	<5% @20%~100%

COPYRIGHT © FOXESS CO., LTD.

Efficiency, safety and protection

Item	Sub-item	Specification
System Parameters	Max. efficiency	98.10%
	Power control accuracy	<5%
	Dimensions (W×H×D)	872×760×266mm
	Weight	90kg
	Noise	<75dB
	Protection rating	IP20
	Ambient operating temperature	-25~60°C
	Ambient storage temperature	-25~60°C
	Cooling method	Air cooling
	Relative humidity	0~95% (non-condensing)
	Altitude	3000m (derating above 3000m)
Display & Communication	Display	None
	Communication interface	RS485, Ethernet, CAN
	Communication protocol	Modbus TCP/RTU, CAN2.0
	BMS connection	Supported
	Parallel connection interface	CAN / Parallel CAN
Protection	DC component protection	<0.5% of rated current
	Reverse polarity protection	Supported
	DC over/under voltage protection	Supported
	Short circuit protection	Supported
	Over temperature protection	Supported
	Phase sequence error protection	Supported
	Anti-islanding protection	Supported
	Low voltage ride through	Supported
	Insulation resistance detection	Supported
	AC surge protection	Type III

COPYRIGHT © FOXESS CO., LTD.

4 Unpacking and handling

4.1 Check after unpacking

After unpacking, the following items must be checked:

Serial number	Check item	Completion
1	The appearance shall be free of damage, scratches, dents, etc.	
2	The product comes with a complete range of options and accessories.	
3	The nameplate information is consistent with the ordered product model	
4	The warning label is not damaged, scratched, blurred, etc.	

4.2 Unpacking precautions

- It is not allowed to remove the packaging of ESS during storage, and it can only be removed when it is installed.
- When receiving goods from the transport company, be sure to carefully inspect the products and check each item received against the delivery note. If any goods are missing or damaged, notify the transport company immediately upon discovery.
- Before unpacking, please check whether the outer packaging of the product is intact and whether it is damaged, soaked, damp, deformed, etc.
- Please open the package in order of layers and do not knock violently.
- When unpacking, please check whether the product and its accessories have any damage, rust, or bruises on the surface.

4.3 Storage and Recharge Instructions

4.3.1 Storage and Maintenance

1) It is recommended that the G-MAX battery storge time is not more than 6 months.
2) Regularly check whether the service environment of the G-MAX meets the requirements, and the installation position should be far away from the heat source.
3) The G-MAX battery module should be stored in an environment with a temperature range between -20°C~40°C, and charged regularly according to the table below with no more than 0.5 C(C-rate is a measure of the rate at which a battery is discharged

COPYRIGHT © FOXESS CO., LTD.

relative to its maximum capacity) to the SOC of 50% after a long time of storage.

4) G-MAX storage charging can be carried out in the same way as normal usage by connecting to the power grid to recharge the battery, without the need for any other power supply devices.

Storage environment temperature	Relative humidity of the storage environment	Storage time	SOC
Below -20°C	/	Not allowed	/
-20~0°C	10%~90%	≤ 1 months	20%≤SOC≤50%
0~35°C	45%~85%	≤ 6 months	20%≤SOC≤50%
35~40°C	10%~90%	≤ 1 months	20%≤SOC≤50%
Above 40°C	/	Not allowed	/

NOTICE
If the battery is stored over one year, 5%~8% of the capacity may lose irreversibly.

5) Every year after installation. The connection of power connector, grounding point, power cable and screw are suggested to be checked. Make sure there is no loose, no broken, no corrosion at connection point. Check the installation environment such as dust, water, insect etc.

4.3.2 Storage with Low SOC

After the product is powered off, static power consumption and self-discharge loss may occur in internal modules. Therefore, charge batteries in a timely manner and do not store the product in low SOC. Otherwise, the product may be damaged due to over discharge, and battery modules need to be replaced.

Storage in low SOC may occur in the following scenarios:

- The DC Switch on the power control module is OFF.
- The power cables or signal cables are not connected.
- The batteries cannot be charged due to a system fault after discharge.
- The batteries cannot be charged due to incorrect configurations in the system.

Regardless of scenarios, the batteries must be charged within the longest interval corresponding to the SOC when the batteries are powered off. If the batteries are not charged within the specified interval, they may be damaged due to over discharge.

COPYRIGHT © FOXESS CO., LTD.

Storage environment temperature	Power-Off SOC Before Storage	Maximum Charge Interval
0~35°C	0% ≤ SOC < 5%	7 days

Note: When the battery SOC decreases to 0%, charge the batteries within seven days. Permanent battery faults caused by delayed charge due to customer reasons are beyond the warranty scope.

4.4 Transportation

- Please package the product strictly before transporting it by vehicle. Closed boxes must be used for long-distance transportation.
- It is strictly prohibited to transport this product together with equipment or items that may affect or damage the product.

4.4.1 Forklift transportation

- It is necessary to test the fork. If it is not suitable, the forklift foot position needs to be adjusted. After testing that the fork is suitable, lift the ESS and move it to the appropriate position.
- During transportation, the ESS tilt angle must be less than 10°, and the undulation height must be as low as possible.
- It is forbidden to transport hydraulic trucks over long distances or on slopes, otherwise the hydraulic trucks may be damaged.
- Please handle it gently when taking off and landing to avoid shock or vibration. When lowering the forklift, be careful not to press your feet.
- Considering that the equipment is high and may block the driver's sight, it is recommended to arrange for personnel to guide the driver depending on the situation.

4.4.2 Crane handling

- Carry out a test lifting to confirm that the straps can bear the weight of ESS and there is no tilt when lifting.
- After lifting, the swing angle must be less than 10°.
- Before moving, make sure that the cabinet door is locked to avoid injuries caused by sudden opening during transportation.
- Lift and place gently when taking off and landing to avoid shock or vibration.

COPYRIGHT © FOXESS CO., LTD.

4.5 Transportation before unpacking

4.5.1 Transportation method

There are two ways to transport unopened packaging: forklift transportation and crane transportation.

4.5.2 Forklift handling steps

Packaged ESS full container products are moved by forklift on the pallet under the packaging, and the operators must be trained.

Adjust the width of the forklift foot so that the center of gravity falls in the middle of the forklift foot. Insert it in the position shown in the figure below.

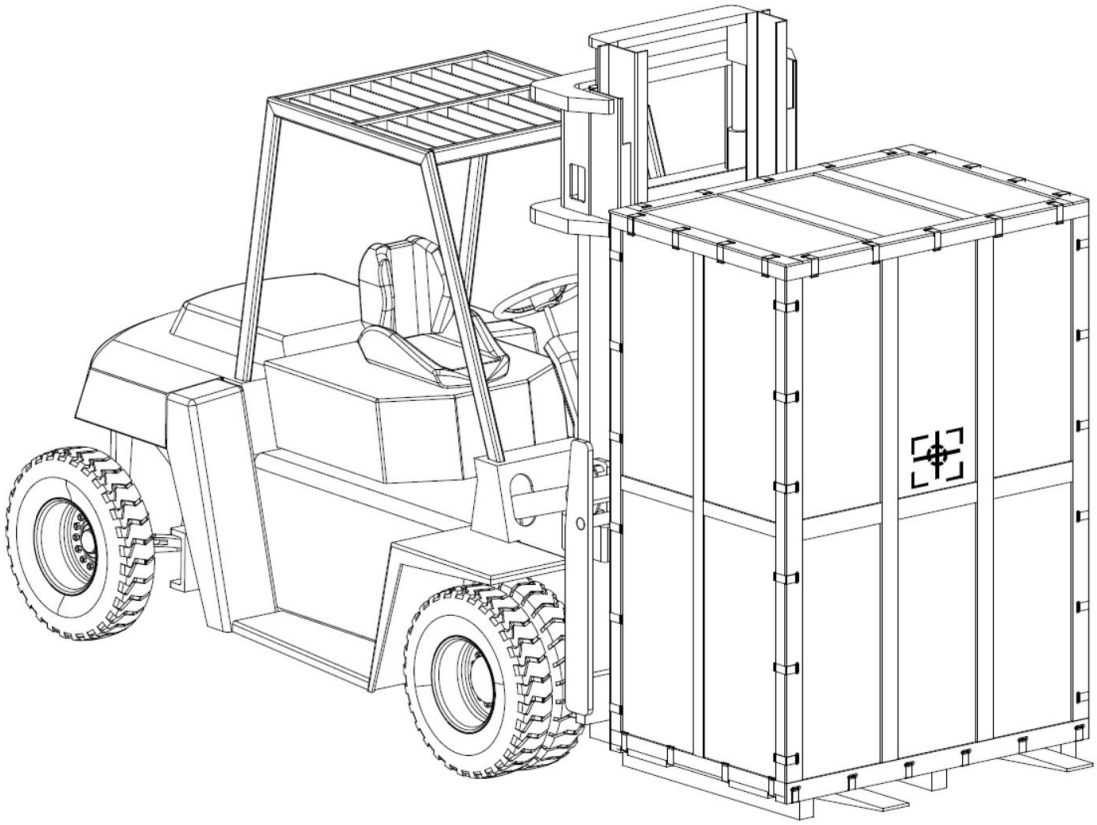

Forklift handling diagram

4.5.3 Crane handling step

Use flexible slings or straps. A single strap must be able to withstand a weight of no less than 3 tons.

Use the straps to tighten the cabinet and follow the steps below.

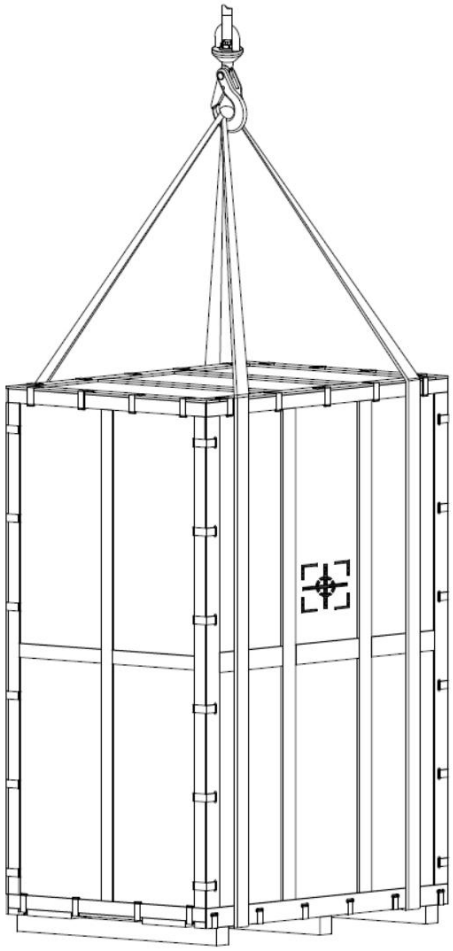

Schematic diagram of lifting and handling with packaging

Notice

The hook should be at least 1m away from the top of the cabinet.

The inclination angle of the cabinet shall strictly comply with the requirements illustrated in the figure below, with the inclination angle α ≤ 10°.

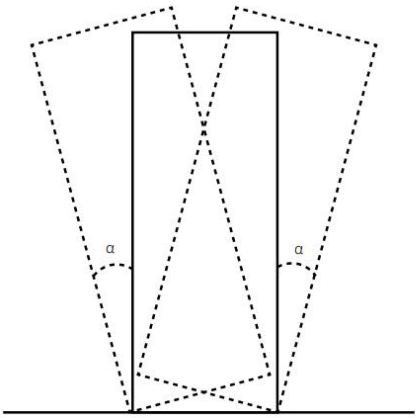

Requirements for Inclination Angle

4.6 Unpacking and Inspection

This equipment has undergone comprehensive testing and inspection before leaving the factory. However, damage may still occur during transportation. Before unpacking, please carefully check the outer packaging for any signs of damage, such as punctures or cracks.

Since the height of the cabinet exceeds 2m, please take protective measures for high-altitude operations when removing the outer packaging. For the unpacking steps, please refer to the figure below.

- Remove the top iron buckle with a flat-blade screwdriver, then take off the top coverplate.

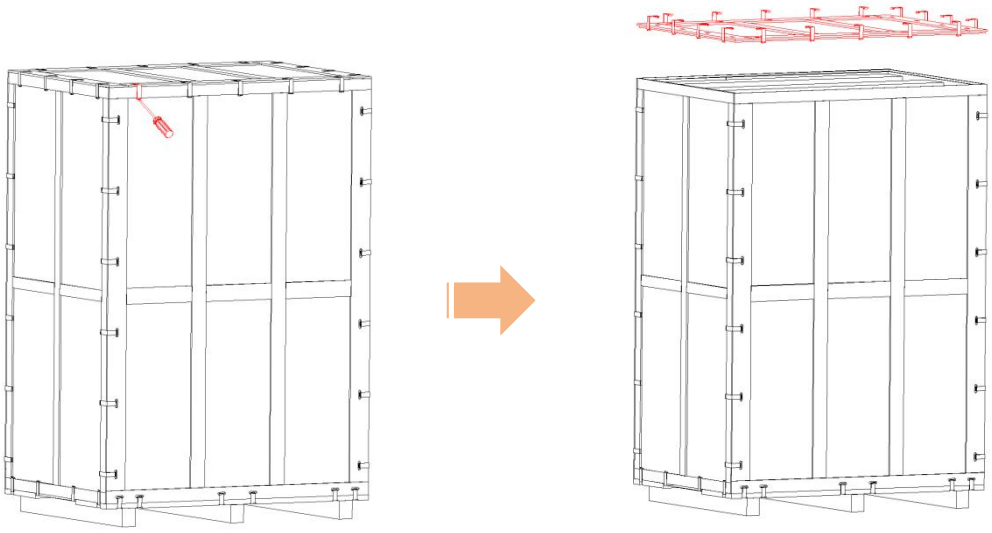

- Remove the side iron buckles with a flat-blade screwdriver, then take off the side panels.

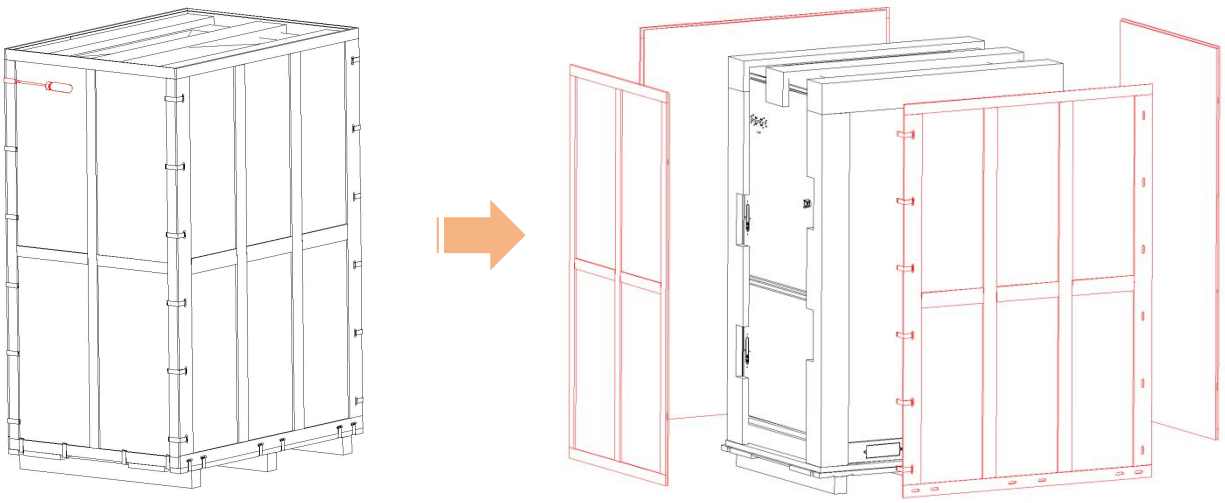

- Remove the top cover plate and four side plates of the wooden case, then take off the buffer cotton and polyethylene packaging bag.
- When unpacking, please handle all packaging materials properly for future storage or relocation of the equipment.
- After unpacking, please check whether the equipment is intact and all accessories are complete. If there is any damage or missing accessories, please contact the after-sales staff immediately for handling.

4.7 Transportation after unpacking

4.7.1 Forklift transportation

Adjust the width of the forklift feet so that the center of gravity falls on the center of the forklift feet.

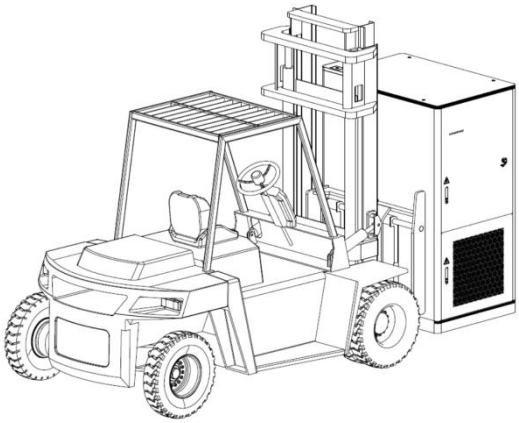

side transport

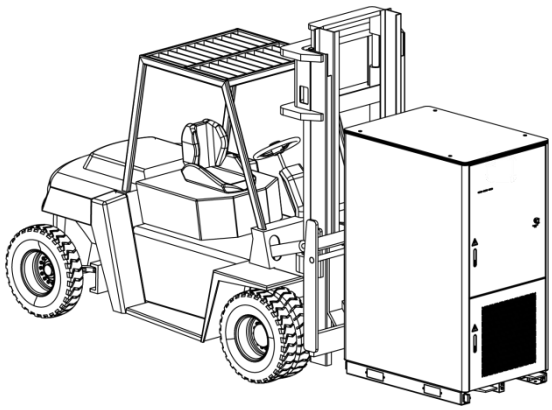

front cross transport

Schematic diagram of forklift transportation without packaging

4.7.2 Crane handling

When moving without packaging, use flexible slings or straps. A single strap can bear a weight of no less than 3 tons.

Tie the cabinet tightly with straps and follow the diagram below.

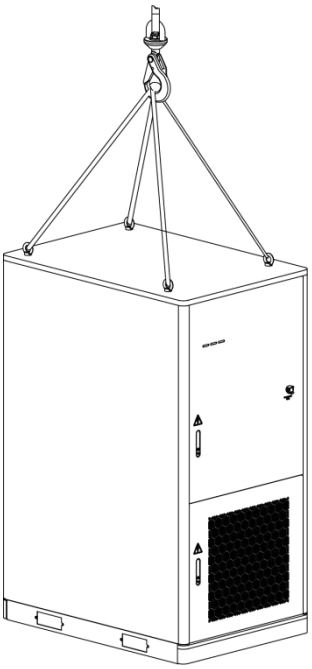

Schematic diagram of hoisting and transportation without packaging

Notice

The hook should be at least 1m away from the top of the cabinet.

The tilt of the cabinet should be less than 10°.

COPYRIGHT © FOXESS CO., LTD.

5 Engineering Installation

5.1 Packing List

A B C D E F

Object	A	B	C	D	E	F
Quantity	1	3	1	4	4	1
Description	G-MAX	AC terminal	N-Wire Terminal	Eyebolt	Sealing clay	Quick Installation Guide

It is recommended to keep the packaging materials of G-MAX during installation and commissioning, and if the packaging materials are to be discarded, please dispose of them according to local laws and regulations.

5.2 Installation Tips

During installation, ignoring the following safety tips may result in equipment damage, personal injury or serious casualties. Please strictly follow the following safety tips.

- Installation must be performed by professionals who follow all warnings and correctly install the equipment.
- Before installation, make sure that the mechanical strength of the installation location is sufficient to support the weight of the equipment, otherwise it may cause mechanical hazards.
- During installation, do not wear loose clothing or jewelry, otherwise there may be a risk of electric shock!
- To facilitate installation and maintenance, it is recommended to leave enough space around the equipment: sufficient cooling airflow, required clearance, space required for cables and cable support structure.
- Make sure that any spanning elements or racks with components installed are properly grounded and that the connection surfaces are unpainted.
- Nickel-plated copper is recommended, but aluminum can also be used.
- Before connecting aluminum bus bars , remove the oxide layer and apply a suitable anti-oxidation caulking compound.

COPYRIGHT © FOXESS CO., LTD.

5.3 Preparation before installation

5.3.1 Tools for Installation

During actual operation, the tools used include, but aren't limited to, the following recommended ones. Given the variety of on - site conditions, choose other auxiliary tools as needed. Note that all tools must strictly adhere to local regulations. This is key to ensuring safe and legal operations.

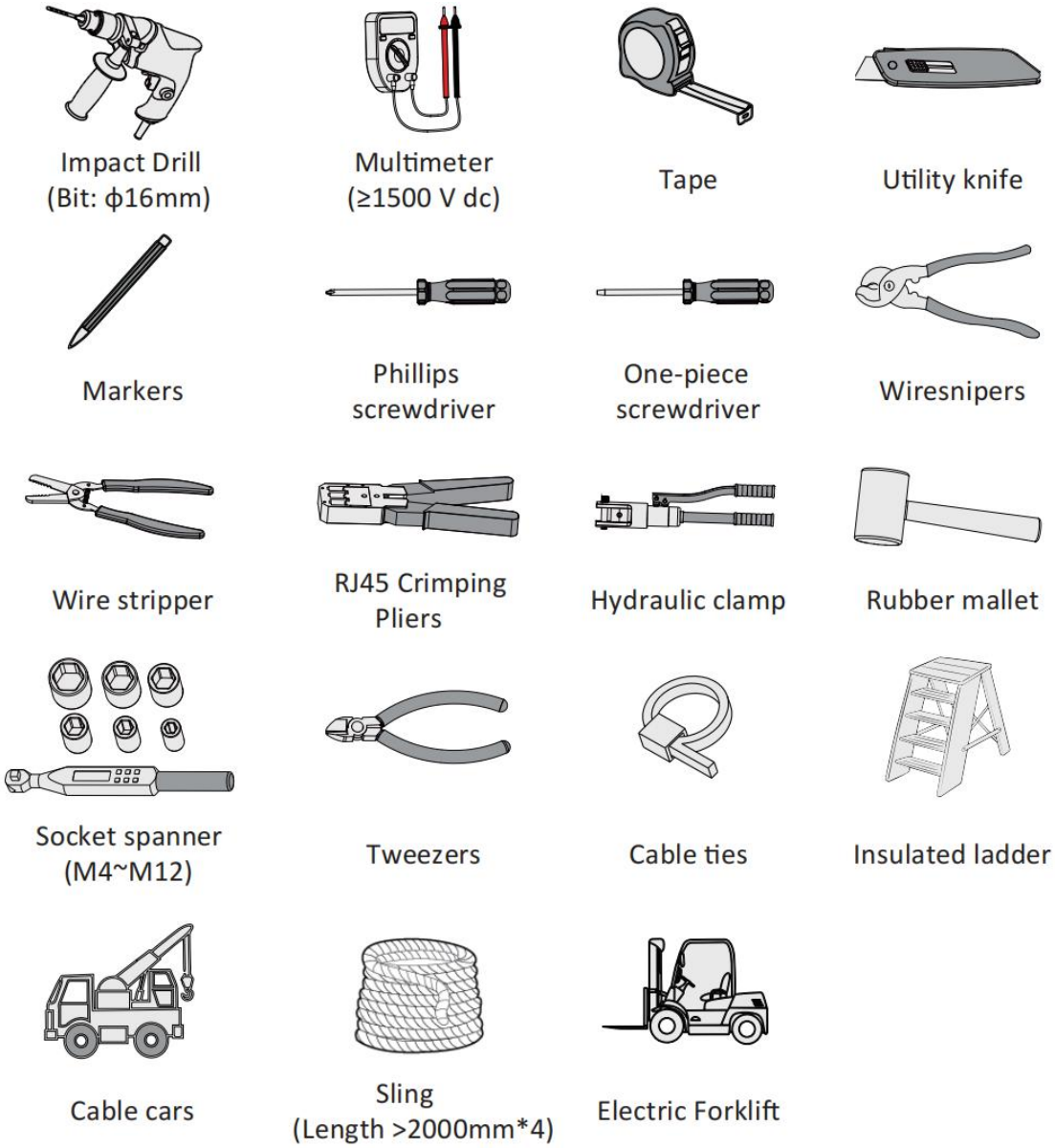

5.3.2 Installation environment requirements

Project	Environmental requirements
Installation site requirements	Good ventilation must be maintained. Make sure there are no trees around the installation location to prevent strong winds from blowing down branches or leaves that may block the product door or air inlet. Do not install the equipment outdoors in salt-affected areas because it may be corroded. A salt-affected area refers to the region within 1000 m of the coast or prone to sea breeze. Regions prone to sea breeze vary with weather conditions (such as typhoons and monsoons) or terrains (such as dams and hills). Keep away from areas where toxic and harmful gases are concentrated. Keep away from flammable, explosive and corrosive items.
Foundation requirements	The installation surface must be flat and dry, and no water accumulation is allowed on the ground. Make sure the ground is level and can bear the weight of the ESS.
Space requirements	Sufficient space must be left in front, behind, left, right, and above the ESS for heat dissipation, maintenance, and escape.
Altitude	3000m, >2000m needs to be reduced in capacity.
Temperature	-25 ℃ ~+55 ℃, operate with derating above +40℃.
Relative humidity	0%~95%.

The intrusion of moisture can easily damage ESS! To ensure the normal use of ESS:

- Do not open the cabinet door when the air humidity exceeds 95%.
- Avoid opening the cabinet door or performing maintenance or repair operations in rainy, thunderstorm or humid weather conditions.

5.3.3 Installation site requirements

(1) Installation space requirements

Sufficient maintenance space and heat dissipation and ventilation space must be reserved at the ESS installation location. The recommended space dimensions are as shown in the figure below.

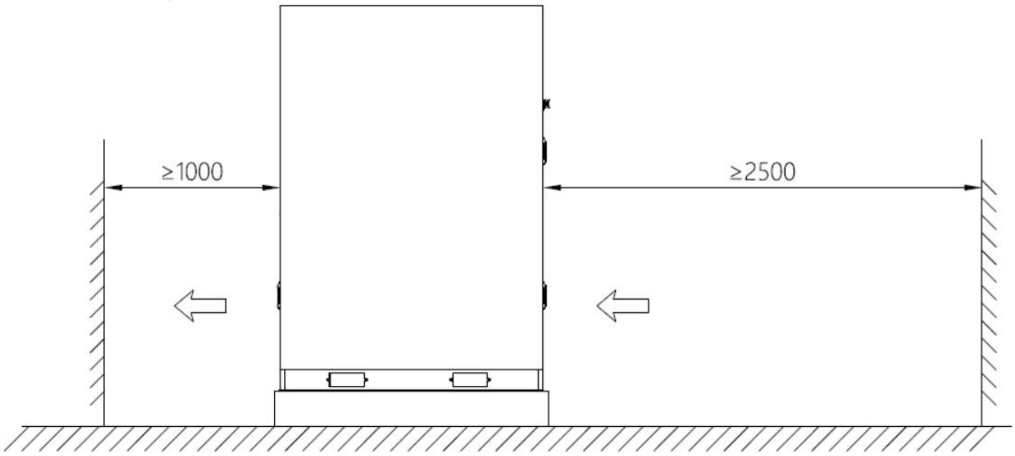

(2) Foundation requirements

ESS must be installed on concrete or other non-combustible surfaces. The installation surface must be level, firm, flat, and have sufficient bearing capacity. No dents or tilts are allowed.

When building the foundation, you need to consider the ESS cable outlet and reserve trenches or cable entry holes. Please refer to the figure below for the installation hole location diagram.

Note: The G-MAX unit is not suitable for indoor installation. If indoor installation is necessary due to special requirements, local laws and regulations must be strictly followed. During installation, the indoor temperature should be strictly controlled at 45°C or below, and the ventilation between the room and the outside environment should be smooth to maintain good air circulation.

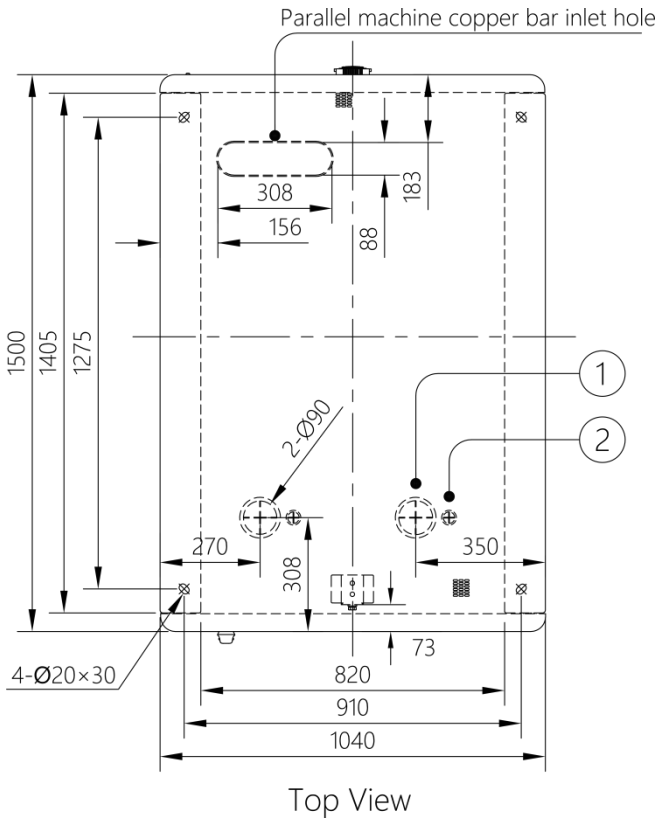

Installation hole diagram (unit: mm)

Project	Illustrate
①	AC cable outlet
②	Communication inlet and outlet holes

Note

- The following foundation drawings cannot be used as final construction drawings and are for reference only.
- During construction, ensure that the bottom of the equipment is higher than the local historical highest water level.
- Equipment (including height, embedded parts, wiring pipes , etc.) is adjusted based on process and on-site.
- The height of the top mark of the equipment foundation can be adjusted according to the actual needs of the equipment and site.
- The equipment foundation shall be configured according to the total weight of the equipment of 3 tons. When the weight of the equipment exceeds the design, it needs to be reviewed.
- If installed on hard ground, it is recommended to use bolt connection. The connection points should be adjusted according to the actual conditions on site.

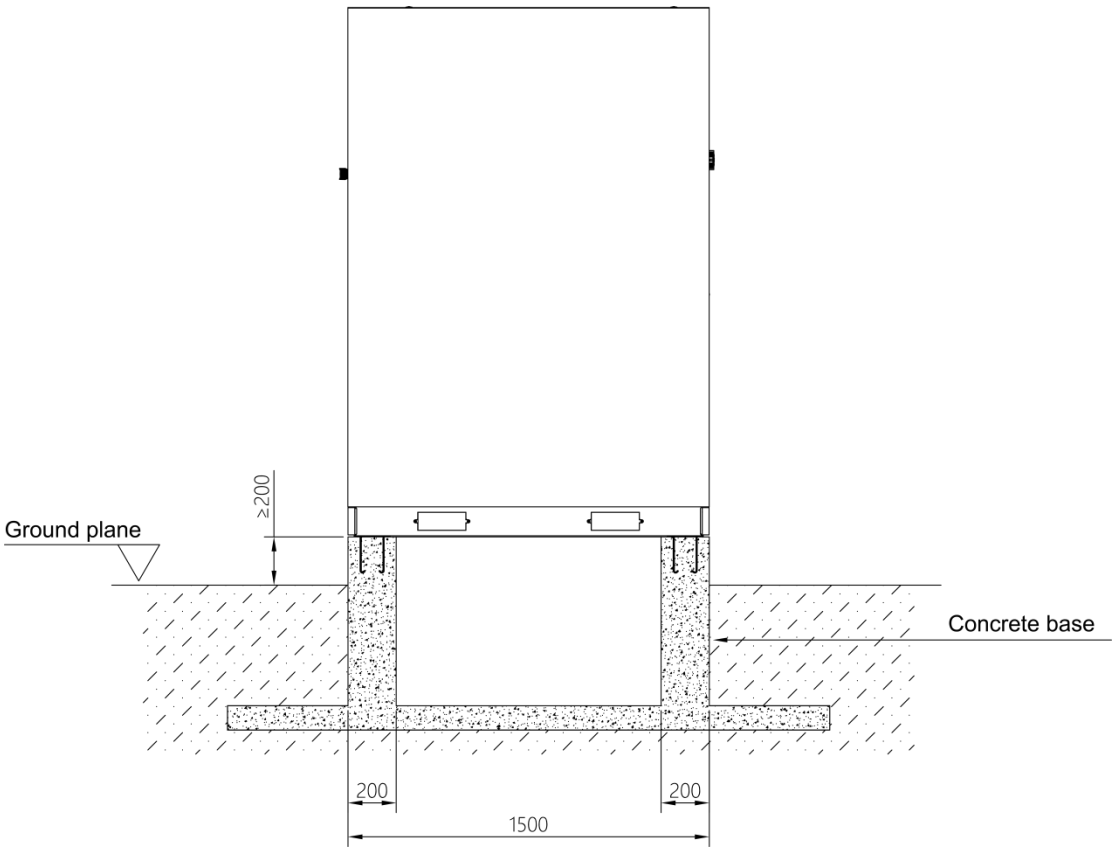

Sectional view of mounting base (side)

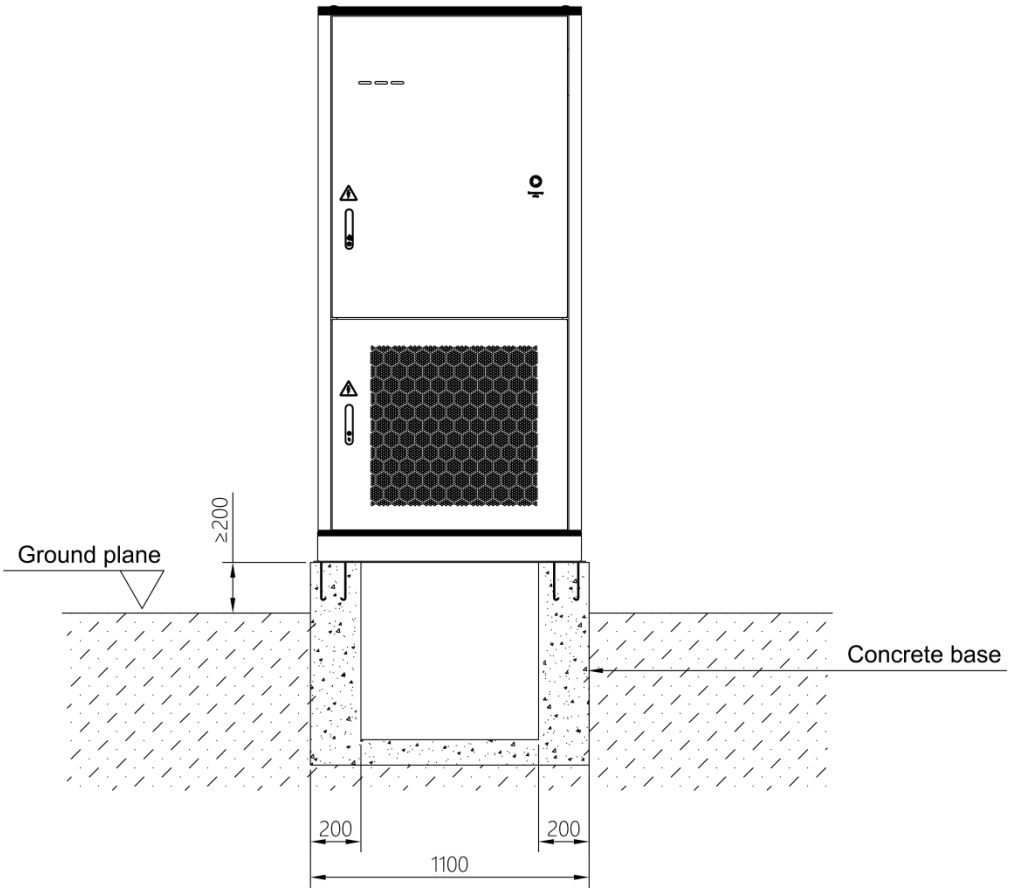

Sectional view of installation base (front)

(3) Gutter requirements

ESS adopts the bottom cable entry method. To prevent foreign objects from entering, there is no cable entry hole on the side of the ESS cabinet. The cables must be entered through the trench. Therefore, a trench must be preset on site. The trench has the following requirements:

- Since ESS uses bottom cable entry, the trench must have necessary dust and rodent-proof design to prevent foreign objects from entering.
- The trench needs to have necessary waterproof and moisture-proof design to prevent the cables from aging and short-circuiting, which will affect the normal operation of ESS.
- Since ESS has a large power, the required cables are thicker, so the cross-sectional area of the cables must be fully considered when designing the trench.

5.4 Ground connection

Note meaning
The grounding method must comply with the standards and regulations of the installation location.

The grounding connection is divided into system grounding and shell grounding.

① System grounding

To ground the system, the user lays the PE wire into the cabinet through the incoming cable. The wire diameter is required to be ≥35mm²(Screw torque 13 N.m). The grounding position is as follows:

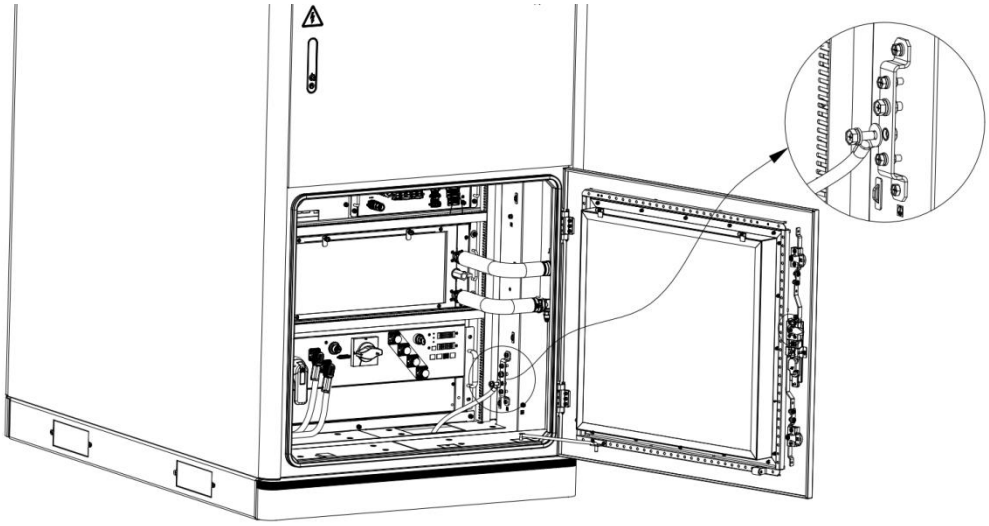

② Shell grounding

There are two methods for grounding the shell: welding and fixing with grounding flat steel or fixing with grounding cables (Screw torque 47 N.m). The location of the grounding point is as shown below:

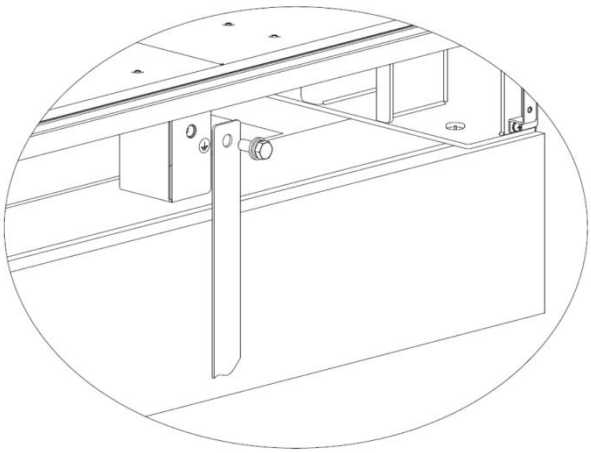

6 Electrical installation

6.1 Wiring preparation

6.1.1 Cable requirements

The requirements for cables used within ESS 's nearest installation distance of 100 meters are as follows, (Recommends multi-core copper cables and water-resistant single-core flexible copper cables):

Name	Type	Recommended wire diameter (mm²)
External ground wire	Outdoor ground wires of 1000V and above，copper wire	35mm² (yellow green)
AC side input line	Outdoor multi-core or single-core cables of 400V and above，copper wire	U/V/W three-phase is 70mm², OD: 16.5±1.0mm N line is 70mm² (blue), OD: 16.5±1.0mm

6.1.2 Crimp end AC terminal

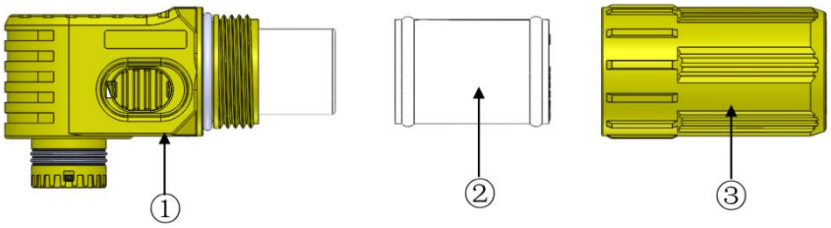

Terminal Assembly Description

No.	Components description	Quantity
①	Connector body	1
②	Grommet	1
③	Rear Shell	1

Terminal crimping procedure:		
Step 1	Un-assemble rear attachments Screw out the rear shell then take out the rear shell. Notes: The grommet should be kept inside of rear shell.	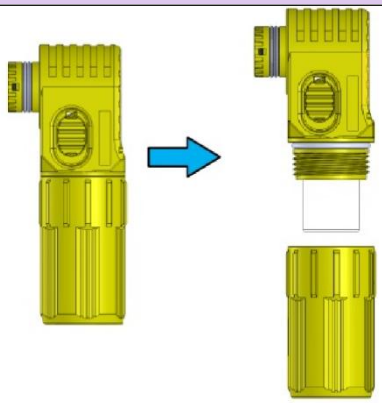
Step 2	Wire stripping Strip the insulator of 14.0±0.5mm. Notes: The cut insulator should kept cover on the conductor.	
Step 3	Preloaded rear attachments Wire pass through rear shell and grommet, then take off the cut insulator. Finally put the conductors of cable into the lug of connector body.	
	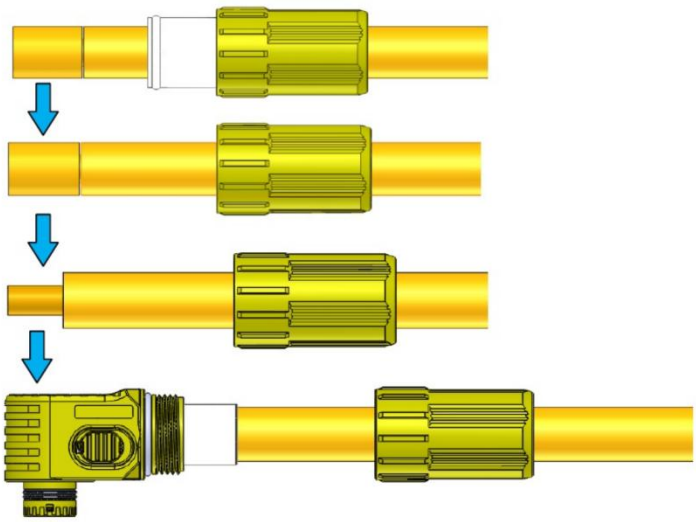	

COPYRIGHT © FOXESS CO., LTD.

Step 4

Crimp the lugs

Crimp (crimp once) the lugs to the cable conductor according to the table below.

Cable Size	Cable Outer Diameter	CCH	CCL
70mm²	15.5±0.5mm	12.4±0.2mm	10.0±0.5mm

Notes:

The recommended crimp sizes are only for reference. The customer shall adjust them according to cable specification and crimp tool and test results including temperature rise and metallographic analysis and pullout force, etc.

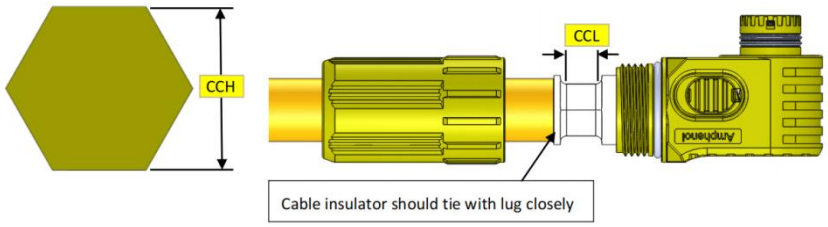

Step 5

Assemble the rear accessories

Put the tighten rear shell to the indicated

location shown as picture by hand or wrench(recommended torque is 1.2±0.1N.m).

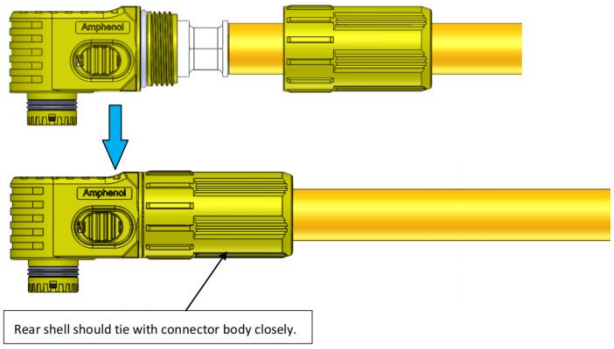

6.1.3 AC input wiring

(1) Cable requirements

To prevent unexpected interruption of the connection between the converter and the grid caused by excessive AC cable impedance, be sure to select a reasonable AC side cable diameter according to Table 6-1;

The cable is grounded, it is necessary to add identification (in any form) to the cable to avoid abnormal wiring;

(2) Wiring steps

Before connecting to the grid, first ensure that the grid voltage and frequency meet the requirements of the converter. For detailed parameters, see the technical parameter table.

Before making electrical connections, make sure all cables are de-energized.

The ESS electrical connection is completed, it is forbidden to close the AC circuit breaker switch, and the AC circuit breaker is in the OFF state, as shown in the figure.

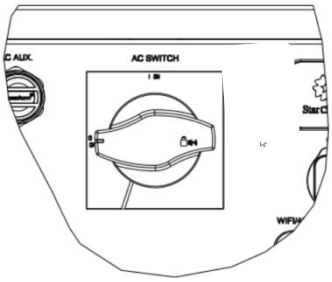

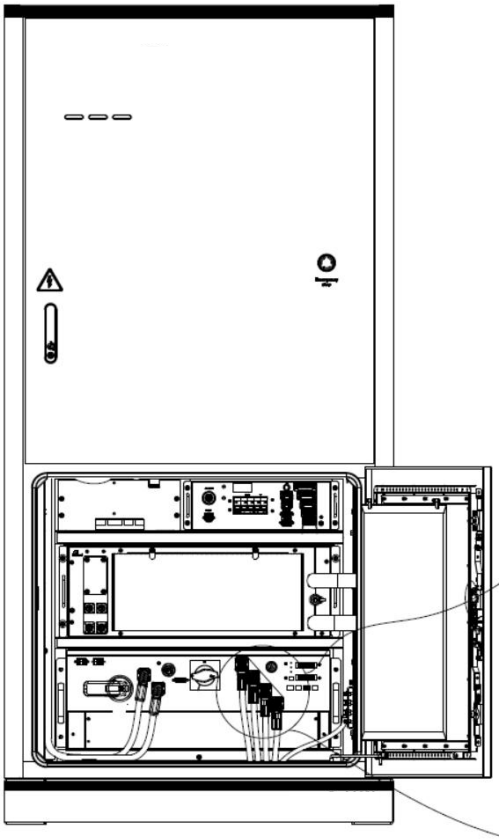

Step 1: Ensure that the external AC circuit breaker is disconnected and will not accidentally close.

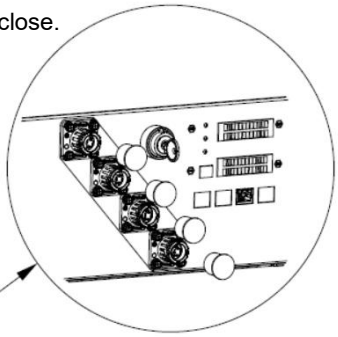

Step 2: Remove the dust caps from the AC U, V, W, and N receptacles.

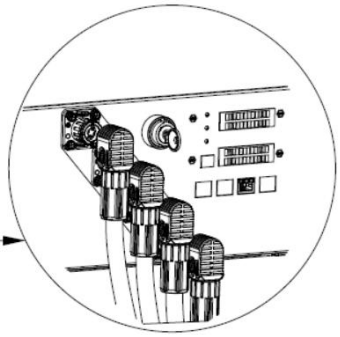

Step 3: Strip the U, V, W and N cables to appropriate lengths with wire strippers, put them into the plug shell and the sealing sleeve; crimp them onto the plug terminals with hydraulic crimpers, assemble the rubber sleeve and the plug shell, and finally insert the plugs into the corresponding sockets of the converter.

COPYRIGHT © FOXESS CO., LTD.

6.2 ESS power on

6.2.1 Check before powering on

Before powering on, please check the following items carefully to ensure they are correct.

- Check whether the positive and negative terminal connections of the battery PACK and the PCS power cable connections are correct.
- Check that the battery PACK, PCS, battery wiring cabinet power loop wiring and all connector plugs and sockets are not loose.
- Check that there should be no short circuit between the positive and negative poles of PACK.
- Check that the battery PACK, PCS, power distribution box, battery power supply cabinet auxiliary power supply wiring and communication wiring should be reliably connected.
- Check that the battery PACK, PCS, power distribution box, liquid cooling unit, and EMS should be reliably grounded.
- Check the battery PACK and liquid cooling pipes for leaks of coolant.
- The internal circuit breaker of the distribution box in the electrical compartment, the PCS AC side circuit breaker, and the PCS DC side disconnector should be in the open state .
- The protective cover inside the device is securely installed.
- Use a multimeter to check whether the AC and DC voltages meet the starting conditions and there is no overvoltage hazard.
- All safety signs and warning labels on the cabinet are firmly affixed and clearly visible.
- Check to make sure no tools or parts have been left inside the equipment.

6.2.2 Power-on steps

Procedure	
Step 1	Use a multimeter to test the voltage between BAT+ and BAT-. The voltage range is 672-876 Vdc.
Step 2	Close the PCS DC Switch. After about 3 seconds, the Power indicator on the PCS panel starts flashing and gradually returns to slow flashing .
Step 3	Close the PCS AC molded case circuit breaker.
Step 4	Close the Liquid and Tr circuit breakers on the power distribution box.
Step 5	Check whether the cabinet door indicator light is normal.

COPYRIGHT © FOXESS CO., LTD.

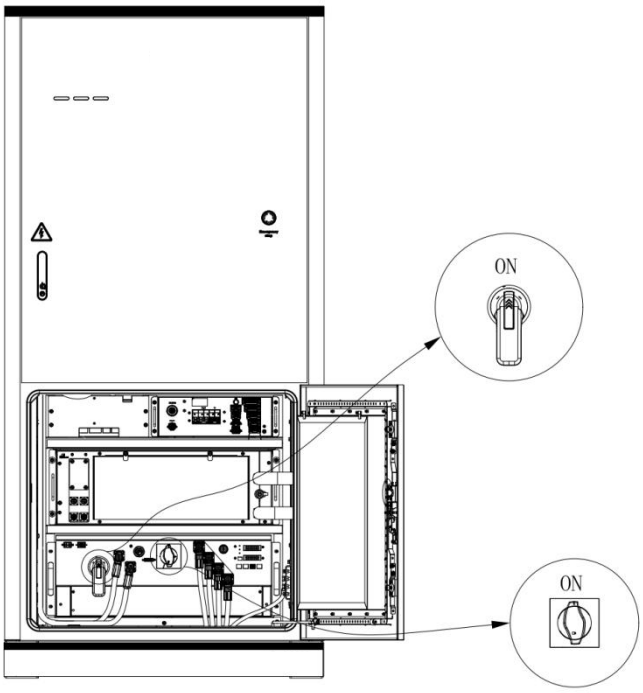

*The above pictures are for reference only, please refer to the actual product received!

6.3 ESS Shutdown

Shutdown is usually divided into two situations: shutdown for normal maintenance or overhaul and shutdown for failure or crisis. According to the two different situations , perform the shutdown steps described in this section .

6.3.1 Normal shutdown

Normal maintenance or inspection, follow the following procedures:

Procedure	
Step 1	PCS shutdown through the shutdown operation command on the WEB interface
Step 2	Open the electrical cabinet door
Step 3	Make sure that the PCS AC side circuit breaker and DC load switch are both closed .
Step 4	Disconnect the Liquid circuit breaker and Tr circuit breaker of the power distribution box
Step 5	Disconnect the PCS AC side circuit breaker AC Breaker
Step 6	Disconnect the PCS DC side isolation switch DC Switch

Warn:

When the machine is working normally, it is strictly forbidden to disconnect the DC load switch directly to avoid the danger of arcing and damage to the DC load switch. In severe cases, it may also cause damage to the PCS .

COPYRIGHT © FOXESS CO., LTD.

6.3.2 Shutdown in case of malfunction or emergency

In case of emergency or failure, follow the following procedures:

Procedure	
Step 1	Press the emergency stop butto
Step 2	Open the electrical cabinet door
Step 3	Make sure both the AC circuit breaker and DC load switch are closed
Step 4	Disconnect the PCS AC side circuit breaker AC Breaker
Step 5	Disconnect the PCS DC side isolation switch DC Switch
Step 6	Disconnect the Liquid circuit breaker and Tr circuit breaker of the power distribution box

Warn:

- The emergency stop button is only used when the machine fails or is in critical condition. During normal shutdown, the shutdown operation should be performed through the button shutdown command on the WEB interface.
- If the situation is urgent, be sure to press the emergency stop button directly to ensure quick response.

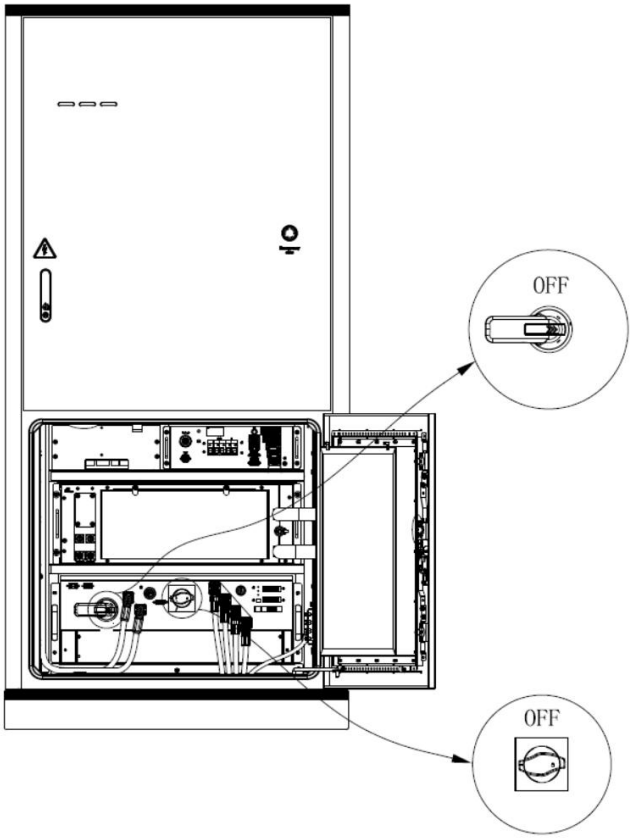

*The above pictures are for reference only, please refer to the actual item received!

7 Cabinet refinishing

- In adverse weather conditions, such as rain, snow, high winds, sandstorms, etc., refinishing shall be discontinued if the outdoor installation area of the equipment is not covered in any way.
- When replacing the paint, please strictly follow the same or similar colour of the location where the paint has fallen off.
- In order to keep the appearance of the equipment in good condition, if you find any paint falling off, please touch up the paint immediately.

7.1 Paint Refinishing Instructions

<table>
<tr><th>Extent of paint damage</th><th>Tools & Materials</th><th>Paint Repairing Steps</th><th>Paint Refinishing Instructions</th></tr>
<tr><td>Slight paint loss on equipment (not touching steel substrate)</td><td rowspan="2">Spray paint or lacquer, brush (for fine areas of paint loss), fine sandpaper, pure alcohol, cotton cloth, spray gun (for large areas of paint loss).</td><td rowspan="2">Steps I, II, III and V</td><td rowspan="4">a. For colours, please refer to the colour code provided by us.
b. For minor paint loss or small areas of stubborn dirt, it is recommended to use spray paint and brush for touch-up.
c. For severe paint loss or large areas of stubborn dirt, it is recommended to use oil paint and a spray gun. c. For severe paint loss or large areas of stubborn dirt, it is recommended to use oil paint and a spray gun for touch-ups.
d. When painting, make sure that the damaged areas are and the thickness of the paint are and the thickness of the</td></tr>
<tr><td>Stubborn dirt on equipment</td></tr>
<tr><td>Significant paint loss on equipment (primer damaged, touching steel substrate)</td><td>Spray paint or lacquer, zinc-rich primer, brush (for fine areas of paint loss), fine sandpaper, pure alcohol, cotton cloth, spray gun (for large areas of paint loss).</td><td>Steps I, II, III, IV and V</td></tr>
<tr><td>Logo or design broken and surface dented</td><td colspan="2">If the logo or any other design is damaged, please contact your local paint company for a paint refinishing plan based on the size, colour and extent of the damage to the logo or design.
a. For damage <100 mm² and <3 mm deep, it is recommended that the dents are first filled with atomic grey and then treated in accordance with the Severe Paint Loss</td></tr>
</table>

	Treatment Procedure. b. If the damage is >100 mm² or >3 mm in depth, please contact your local supplier for a repair plan according to the actual situation.	paint are even and appropriate to ensure the appearance of the whole The appearance is uniform. e. After painting, let the cabinet stand for at least 30 minutes to allow the paint to dry. After painting, the cabinet must be left to dry for at least 30 minutes before proceeding to the next step. dry before proceeding to the next step.

7.2 Paint Repairing Steps

Procedures	
Step 1	Lightly sand the painted areas with fine sandpaper to remove any surface rust or dirt.
	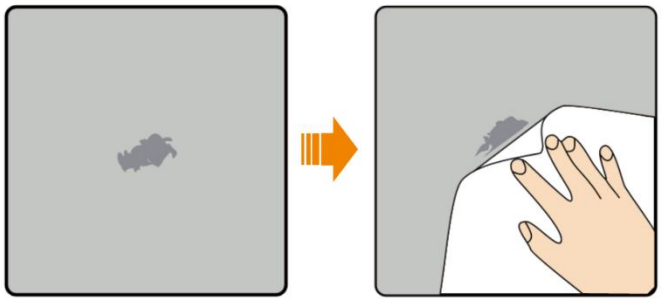 Sanding off areas of paint
Step 2	Clean the paint loss area properly with a damp cotton cloth to remove the dirt, and then wipe it with a dry cotton cloth.
	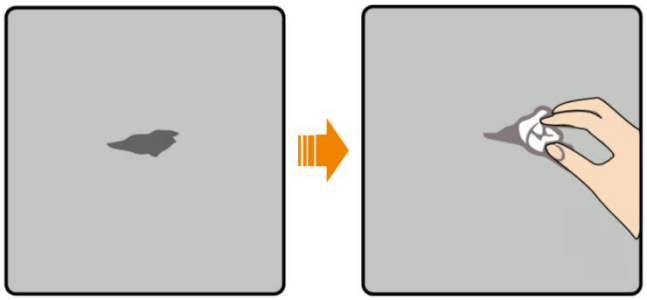 Cleaning of paint loss areas

Step 3	Apply the zinc rich primer to the surface of the flaking area with a brush or spray gun. ● If the metal layer underneath the area of paint loss is exposed. ➢ First, an epoxy zinc-rich primer must be applied to the surface of the metal layer; ➢ Next, an acrylic topcoat is applied until the primer dries and completely covers the bare metal layer. ● Epoxy zinc-rich primer and acrylic topcoat should be decided according to the paint coating of the equipment surface.
Step 4	Depending on the extent of the paint damage, either self-apply, brush or use a spray gun to evenly spray the damaged area. When refinishing, make sure that the application range, paint thickness and smoothness of the area where the paint has fallen off are all even and appropriate to ensure a consistent overall appearance. If there are other colours around the area where the paint has fallen off, carefully cover the undamaged area with tape or paper before painting to avoid accidentally spraying on the other colours.
	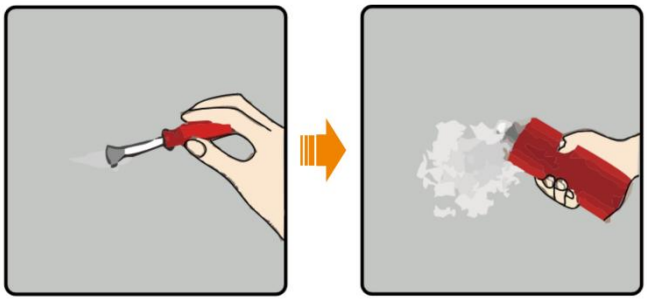 Touch up paint
Step 5	After touching up, allow the paint to dry for at least 30 minutes and then check the area for compliance. The colour of the repaired area should be the same as the colour of the surrounding area. The colour difference can be measured with a colourimeter and should be ≤ 3. For colours that cannot be measured with a colourimeter, make sure that there is no significant colour difference between the edges of the repaired area and the surrounding area, and that there are no bumps, scratches, paint flaking or paint breaks. If spray painting is used, it is recommended that 3 coats be applied before checking for compliance. If not, please repeat the spraying several times until it meets the requirements.

COPYRIGHT © FOXESS CO., LTD.

8 Appendix

8.1 Quality Guarantee

FOXESS CO., Ltd. (hereinafter referred to as "the Company") will, for products found to be faulty during the warranty period, repair the product free of charge or replace it with a new one.

Supporting Documentation Required

When requesting warranty service, the customer must present the original purchase invoice indicating the date of purchase. Furthermore, the product's trademark must be clearly visible. The Company reserves the right to decline warranty coverage if these conditions are not met.

Relevant Conditions

- Non-conforming products replaced under warranty shall be disposed of by the Company.
- The customer must allow the Company a reasonable period of time to complete repairs on faulty equipment.

Warranty Exclusions

The Company reserves the right to decline warranty coverage under the following circumstances:

- The entire machine or specific components have exceeded the free warranty period.
- Damage incurred during transportation.
- Faults resulting from incorrect installation, modification, or use.
- Operation in environments that exceed the limits specified as harsh in this manual.
- Malfunctions or damage caused by installation, repair, alteration, or disassembly performed by service organizations or personnel not authorized by the Company.
- Use or installation outside the scope defined in the relevant international standards.
- Damage caused by abnormal natural disasters.
- Damage resulting from storage conditions that do not meet the requirements stated in the product documentation.
- Any losses arising from failure to adhere to the safety precautions outlined in this manual.

If a product failure is caused by any of the above circumstances and the customer still requests repair services, the Company's authorized service organization may, upon assessment, provide repair services subject to a charge.

Other Provisions

The Company reserves the right to change product dimensions and parameters based on its latest documentation without prior notice.

COPYRIGHT © FOXESS CO., LTD.

8.2 Contact Us

If you have any questions about the product, please contact us:

- Fox ESS Headquarters: No.939, Jinhai Third Road, New Airport Industry Area, Longwan District, Wenzhou, Zhejiang, China.
- Wuxi R&D Center: No. 37 Huaqing Avenue, Wuxi Economic Development Zone (Intersection of Huaqing Avenue and Huayun Road)
- Wuhan R&D Center: 6th Floor, Block A, Tower T4, CHINA PROCUREMENT CENTER, No.789 Gaoxin Avenue, East Lake New Technology Development Zone, Wuhan City, Hubei Province, P.R. China
- Shanghai R&D Center: No.1255, Jinhai Road, Pudong New Area, Shanghai, China
- After-Sales Service Hotline: 400 1888 900
- Contact Telephone (Wenzhou): 0577-88159999
- Contact Telephone (Wuxi): 0510-68092998
- Contact Us: info@fox-esscom
- Contact Us (EV Charger): ev@fox-esscom
- After-Sales Service: service@fox-esscom

COPYRIGHT © FOXESS CO., LTD.